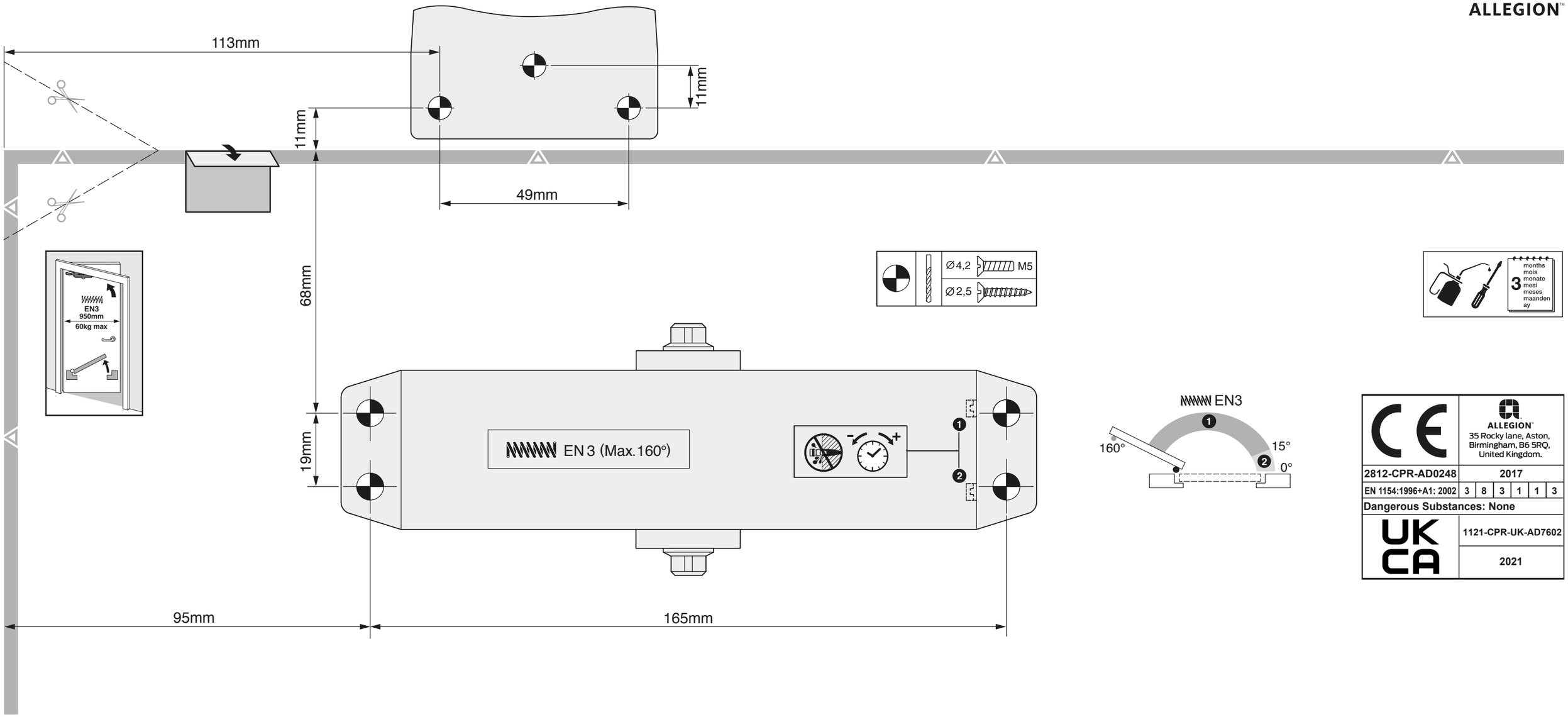

CE	ALLEGION™ 35 Rocky lane, Aston, Birmingham, B6 5RQ, United Kingdom.
2812-CPR-AD0248	2017
EN 1154:1996+A1: 2002	3 8 3 1 1 3
Dangerous Substances: None	
UK CA	1121-CPR-UK-AD7602
	2021

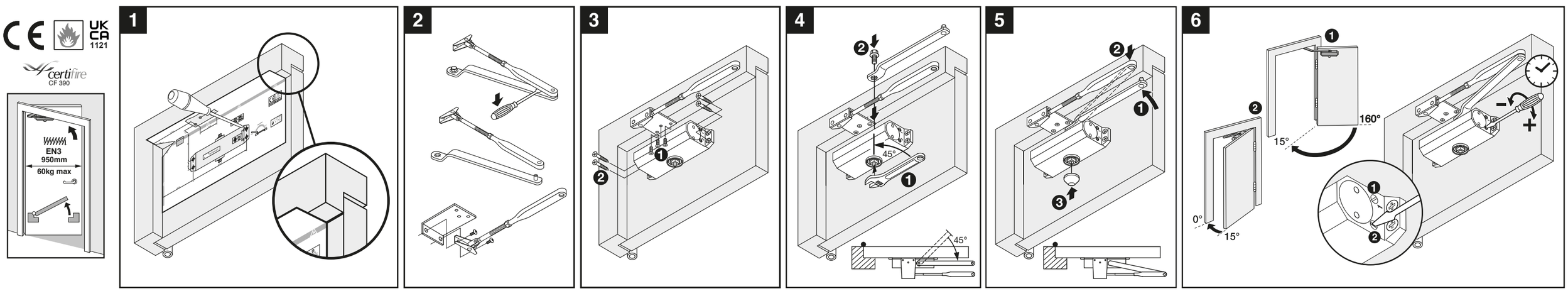

AL-0000419975/C

ALLEGION™

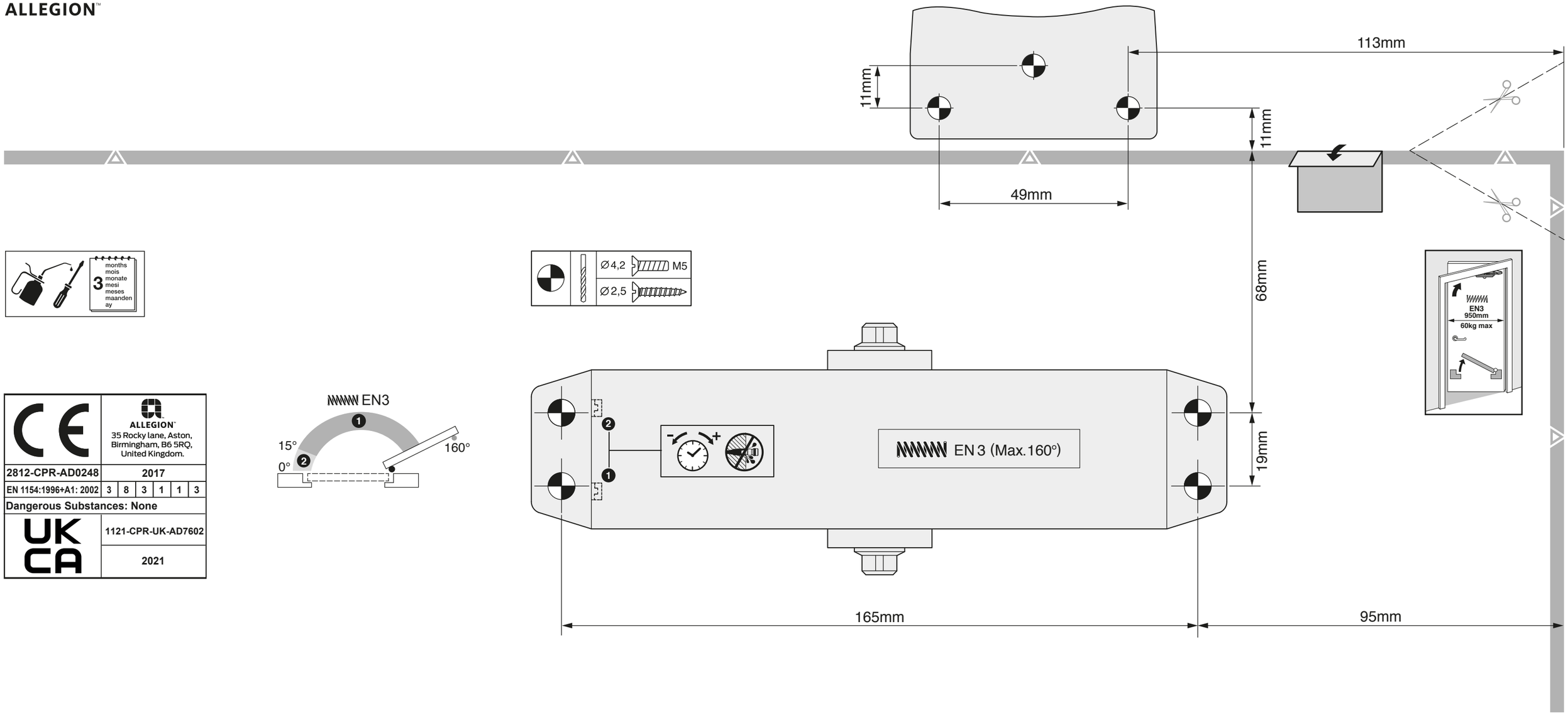

CE	ALLEGION™ 35 Rocky lane, Aston, Birmingham, B6 5RQ, United Kingdom.					
2812-CPR-AD0248	2017					
EN 1154:1996+A1: 2002	3	8	3	1	1	3
Dangerous Substances: None						
UK CA	1121-CPR-UK-AD7602					
	2021					

CE UK CA 1121

certifire CF 390

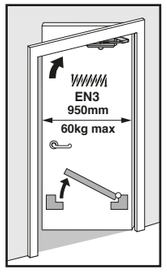

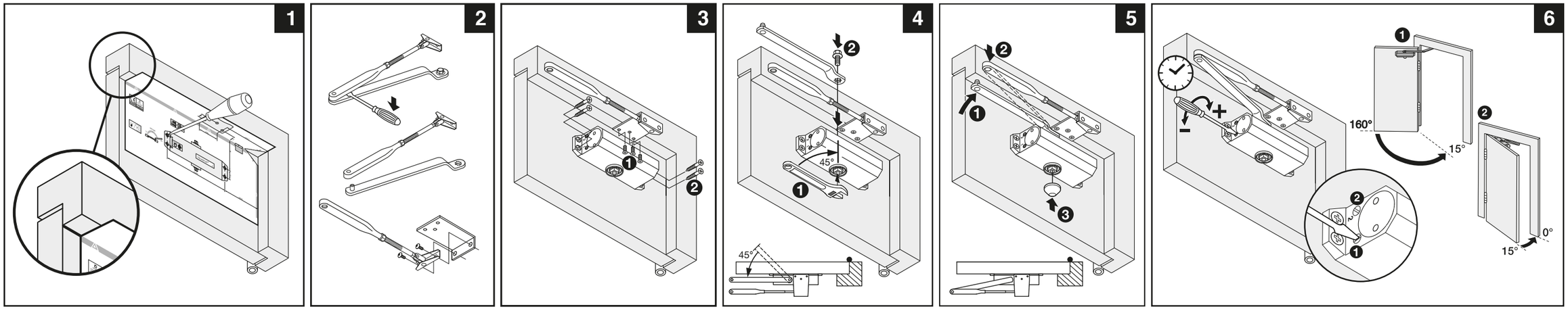

AL-0000419975/C